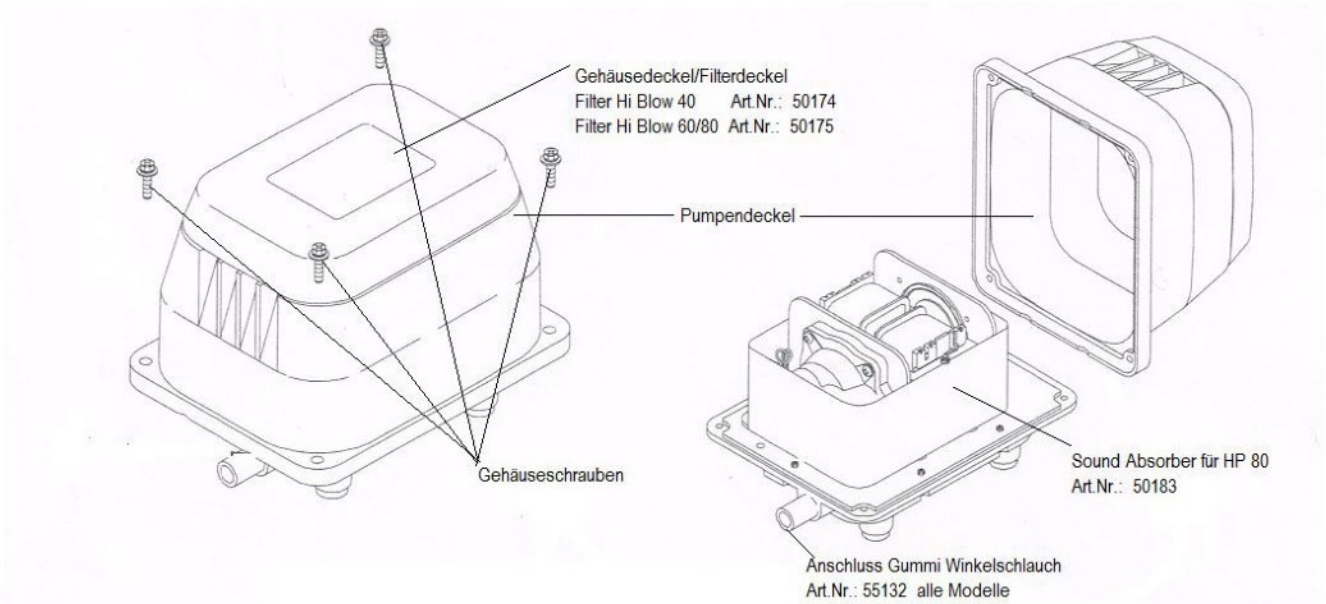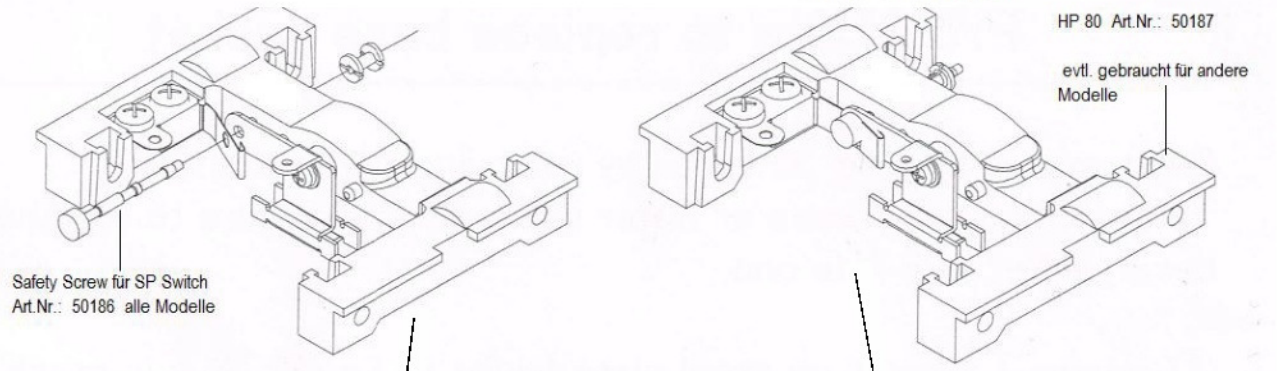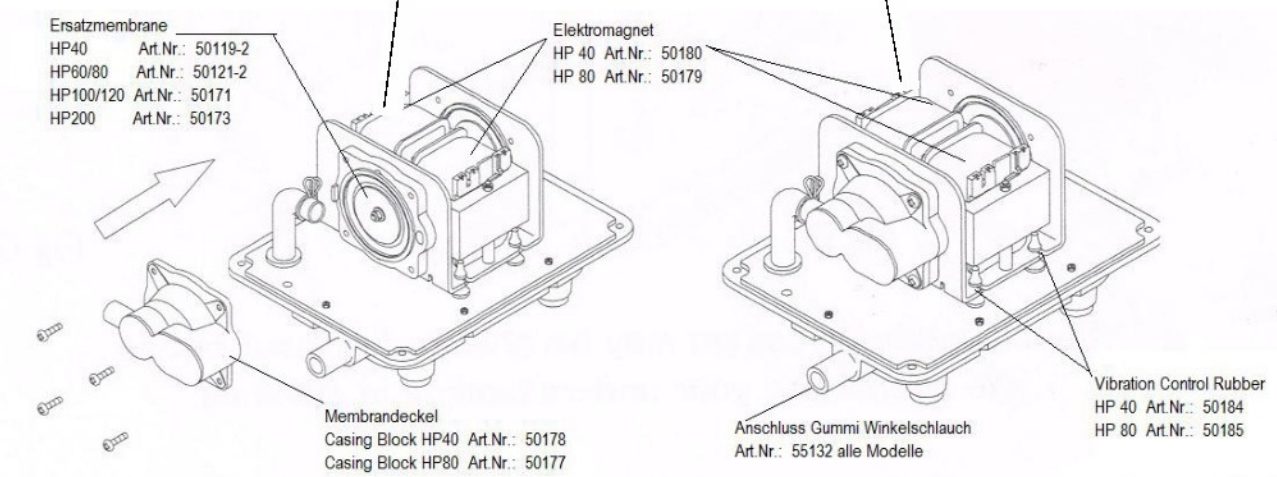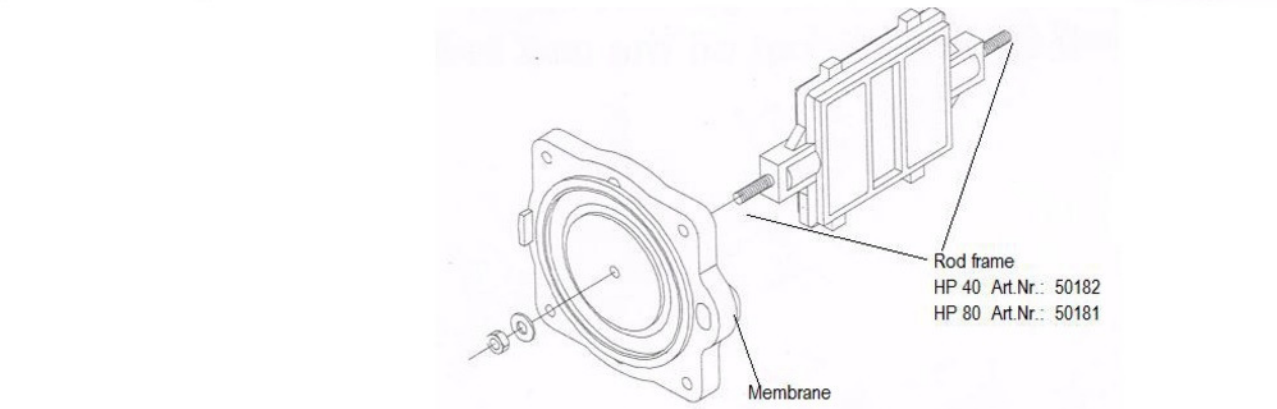Hiblow 20/40/80/100/120/200